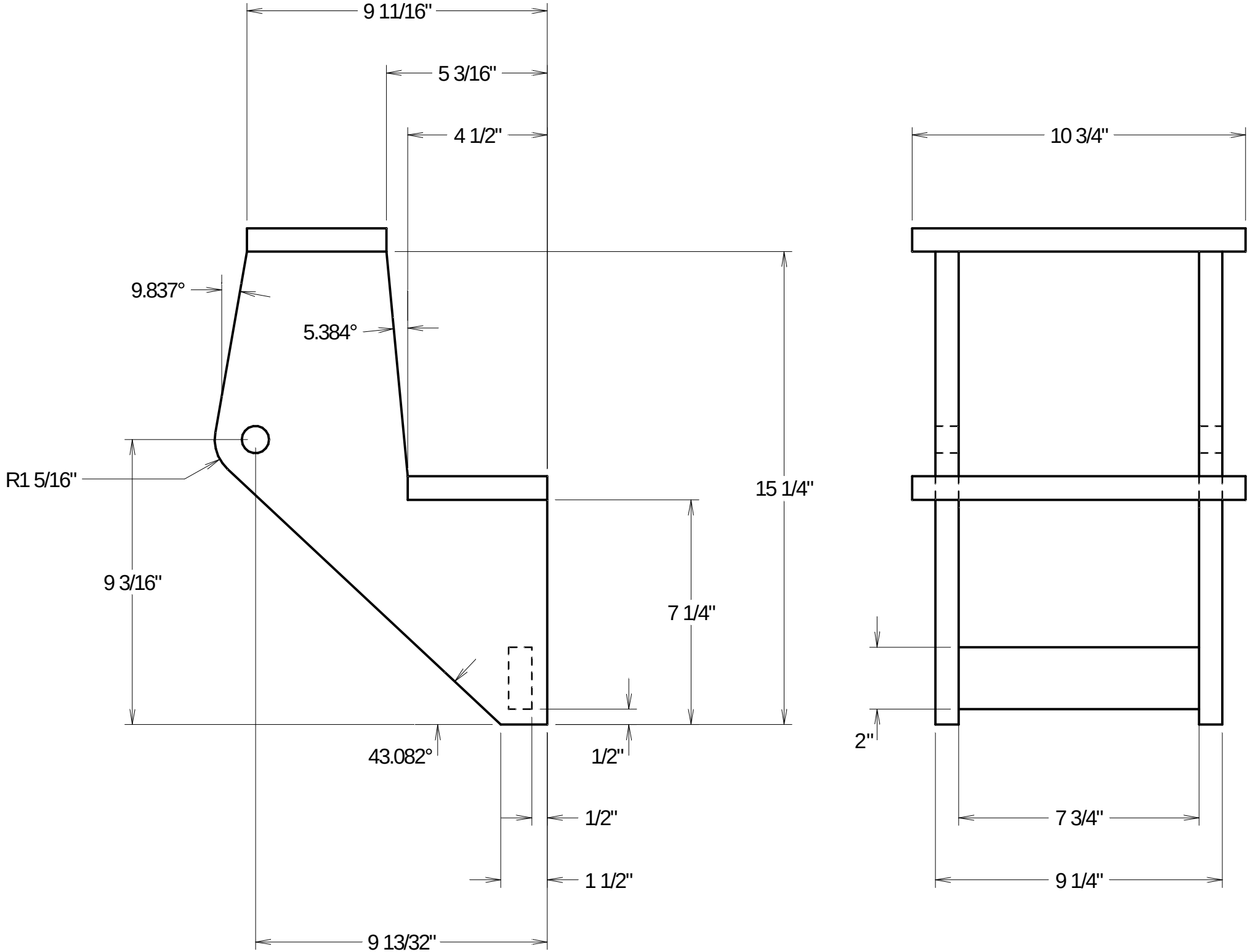
9 11/16"
5 3/16"
4 1/2"
10 3/4"
9.837°
5.384°
R1 5/16"
15 1/4"
9 3/16"
7 1/4"
43.082°
1/2"
2"
1/2"
7 3/4"
1 1/2"
9 1/4"
9 13/32"